CED 2P22-E

THIS DOCUMENT CONTAINS INFORMATION PROPRIETARY AND CONFIDENTIAL TO THE MARCO COMPANY AND MAY NOT BE REPRODUCED, PUBLISHED, OR DISTRIBUTED IN ANY FORM OR DISCLOSED IN WHOLE OR IN PART WITHOUT THE AUTHORIZATION OF THE MARCO COMPANY.

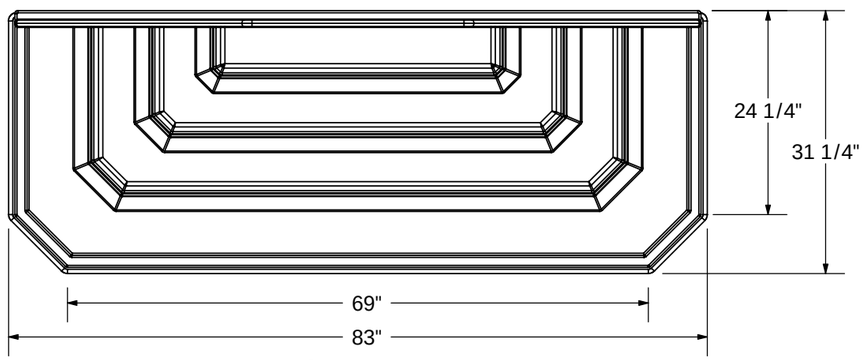

TOP VIEW

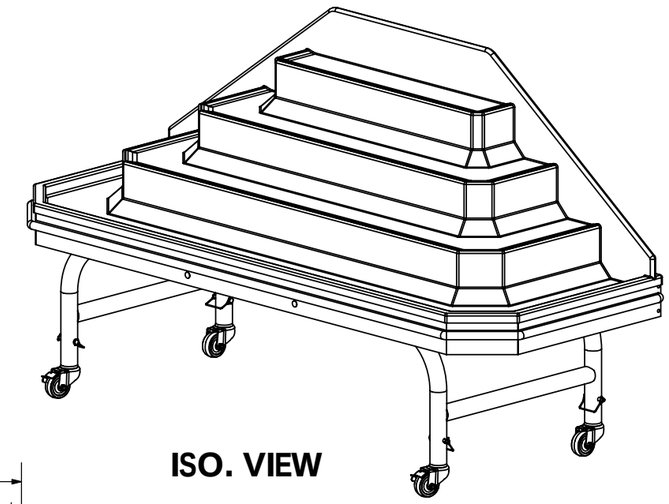

ISO. VIEW

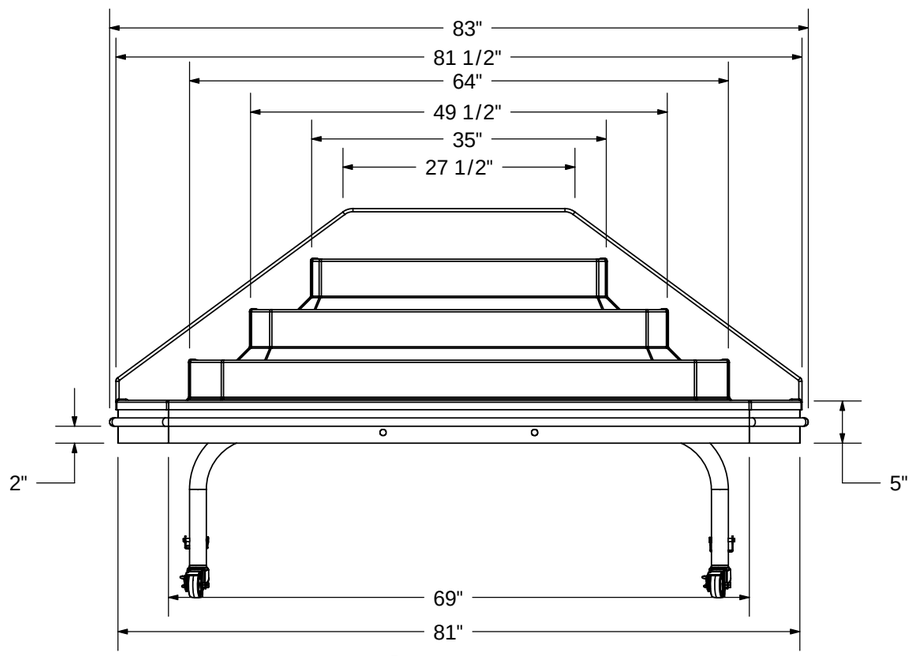

FRONT VIEW

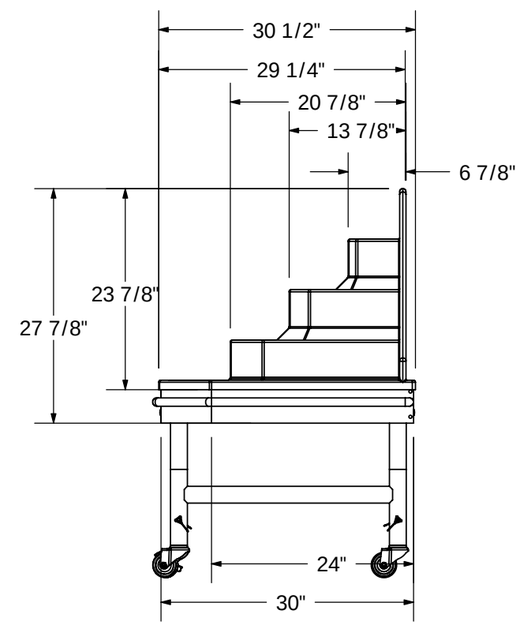

SIDE VIEW

UNLESS OTHERWISE SPECIFIED DIMENSIONS ARE IN INCHES AND TOLERANCES ARE: FRACTIONS ±1/16" DECIMALS .X ± .030 .XX ± .015 .XXX ± .005 ANGLES ±1°	APPROVALS	DATE	The MARCO Company 3209 Marquita Drive Fort Worth, Texas 76116 PH: (817) 244-8300
	DRAWN BY: HH	05/15/02	ITEM(S): VEG-106 EC #5
	CHECKED BY: TN	06-25-03	DWG TYPE: PRODUCTION
	APPROVED BY: CJ	06-25-03	TITLE: VEG-106 END CAP
MATERIAL:	APPROVED BY:		
FINISH:	APPROVED BY:		
THIRD ANGLE PROJECTION	DRAWN ON: SOLIDWORKS 2001PLUS		SIZE B / DWG# 2055 / QUOTE# / REV. A
USED ON / DO NOT SCALE DRAWING			SCALE: 1:18 / SHEET 1 OF 4