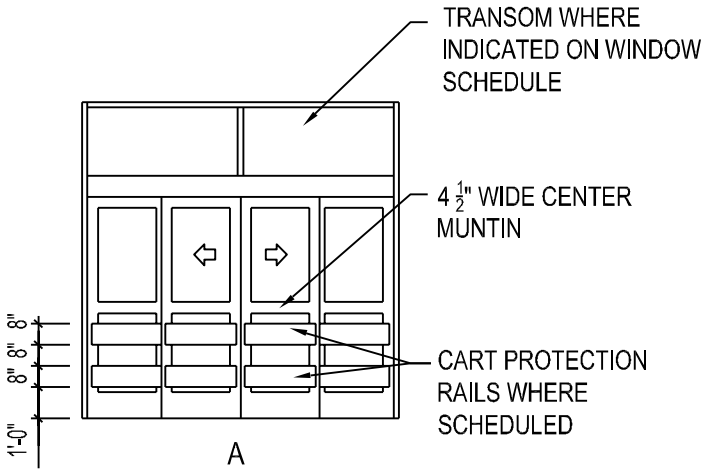


A

SLIDING AUTOMATIC ENTRANCE DOORS

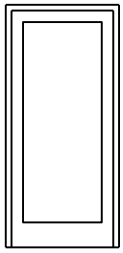

B

ALUMINUM AND GLASS SWING DOOR

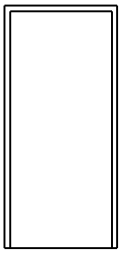

C

FLUSH DOOR

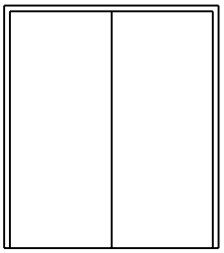

CC

FLUSH DOUBLE DOOR

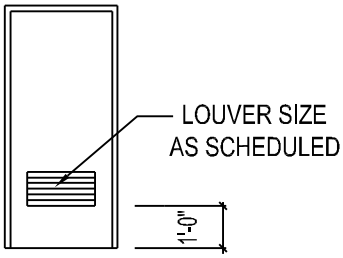


CL

FLUSH DOOR WITH LOUVER

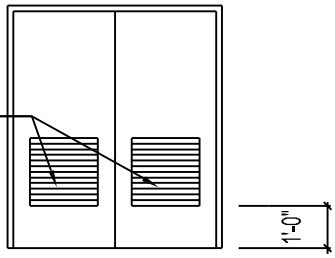


CCL

FLUSH DOUBLE DOOR WITH LOUVER

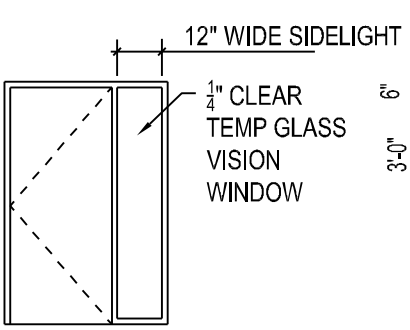


CSL

FLUSH DOOR WITH SIDELIGHT

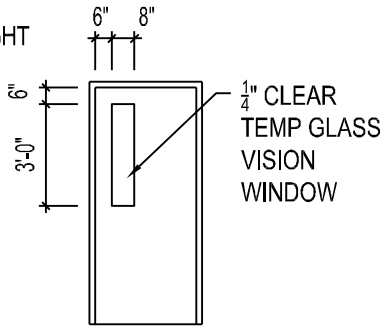


D

FLUSH DOOR WITH VIEW GLASS

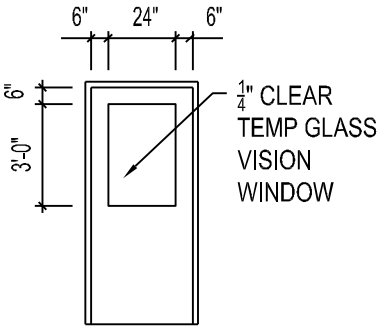


E

FLUSH DOOR WITH HALF GLASS

| DATE | DEFENSE COMMISSARY AGENCY<br>DIRECTORATE OF ENGINEERING<br>FORT LEE, VIRGINIA - LACKLAND AFB, TEXAS | | DESIGN STANDARD |
|---|---|---|---|
| JUN 2022 | TITLE<br>STANDARD DOOR TYPES | REF.<br>REV. | 081000-01 |